Sermoon M500

New Benchmark for Industrial FDM 3D Printers

510*510*610mm
Build Volume

Steady &
Constant Printing

0.6mm Hardened
Steel Nozzle

Remote Monitoring
with Camera

510*510*610mm
Large Build Volume

Stable Linear Rails
at X & Y-axis

Precision Ball Screws
at Z-xis

High-performance
32-bit Mainboard

300℃
High-temperature Printing

60℃
Thermostatic Chamber

1080P HD Camera
for Monitoring

0.6mm
Hardened Steel Nozzle

Industrial Grade Build Volume

Sermoon M500 offers a build volume of 510*510*610mm, spacious enough to print a large piece or a big batch of small parts. It is a powerhouse for prototyping, manufacturing, R&D, and more.

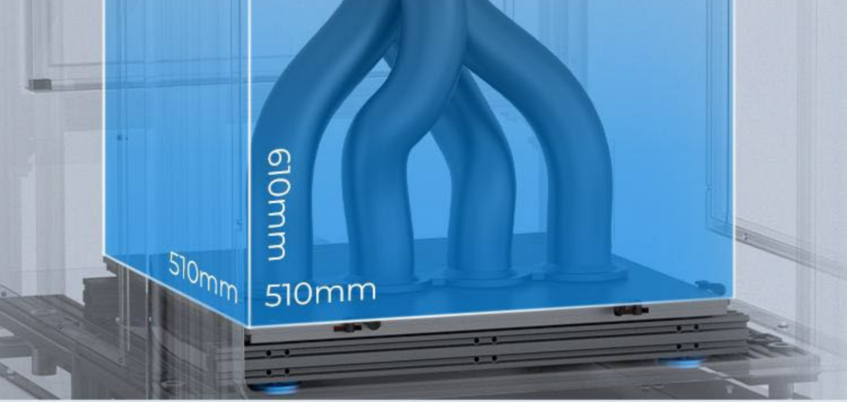

Built for Constant Production

Boasting a stable motion system and reliable printing performance, Sermoon M500 is a go-to 3D printer for constant industrial production.

CREALITY
CREALITY

Ultra Stable Motion System

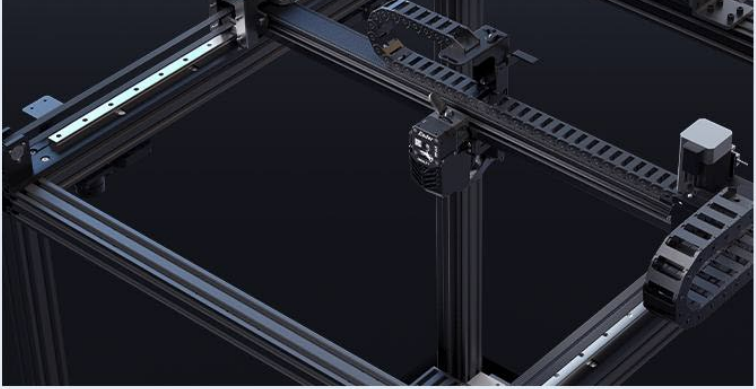

Linear Rails at X & Y-axis

The stiff and precision linear rails let the printhead move steadily in the XY plane.

Ball Screws at Z-axis

4 low-friction and precision ball screws carry the build platform up and down the Z-axis smoothly and accurately.

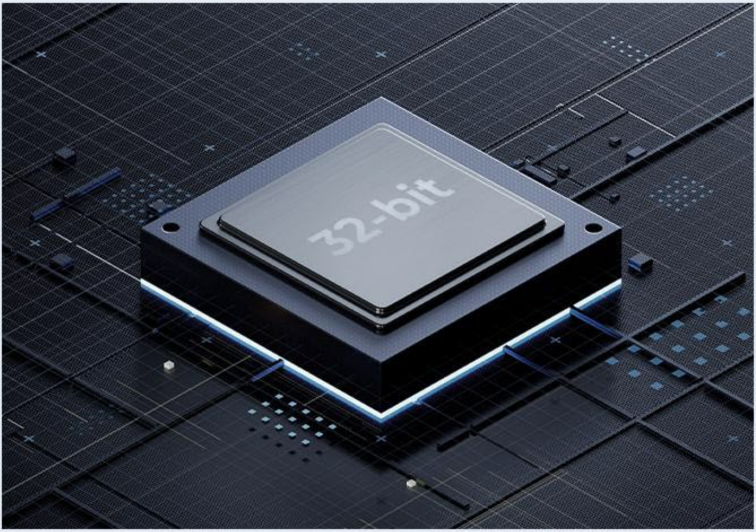

32-bit Mainboard

Resistant to electromagnetic interference and speedy to give precise control commands,
it helps the printer run uninterruptedly.

Reliable Extrusion for Consistent Results

Sermoon M500’s printhead combines a powerful dual-gear extruder and a high-flow hotend. It can work continuously at up to 300°C with smooth extrusion. Highly reliable to deliver successful prints.

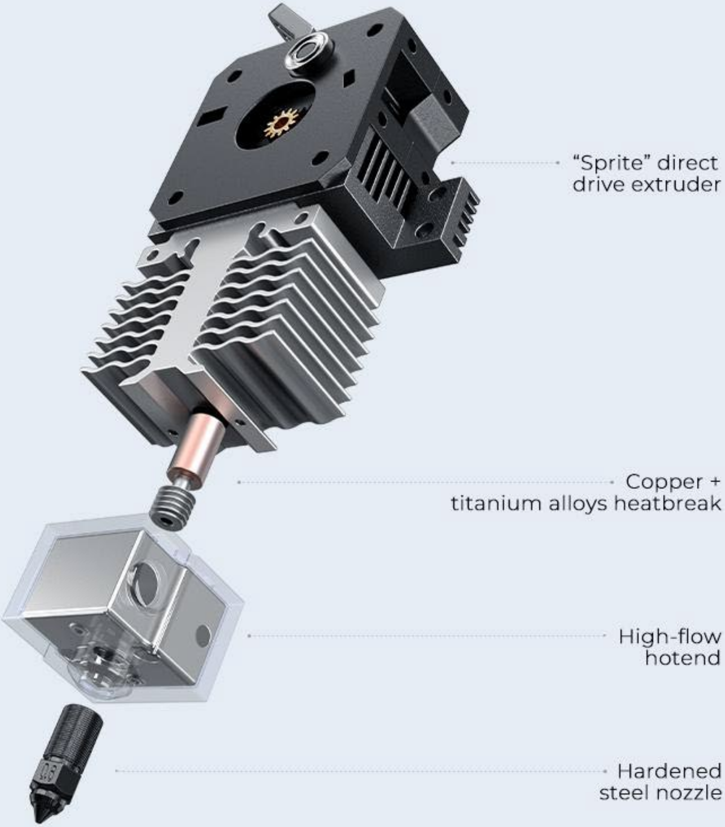
"Sprite" direct drive extruder
Copper + titanium alloys heatbreak
High-flow hotend
Hardened steel nozzle
0.8

Fulfilling Specs with Right Filaments

Thanks to the mighty printhead, Sermoon M500 is
able to handle flexible, wear-resistant,
and more filaments apart from the regular PLA.
You can always find the right filament
to print a specific prototype or part.
Supported Filaments: PLA, ABS, TPU, PC, PETG,
PLA-CF, PA-CF, etc.

Thermostatic Chamber to Forge Strong Prints

The 60℃* heated chamber envelopes the print in constantly warm air. And the underlying heatbed can heat up to 120℃*. Together, they enable engineering-grade prints.

· Stronger bonding between print layers
· Less warping or cracking due to residual stress
· Higher strength of the 3D printed parts

*Both are the maximum temperatures. The data are recorded by Creality Lab at a 25°C room temperature.

Remote Monitoring with Camera

The built-in HD camera and network capability allow you to monitor the printing status and progress remotely with Creality Print or Creality Cloud.

The video playback function is handy for troubleshooting and process improvement.

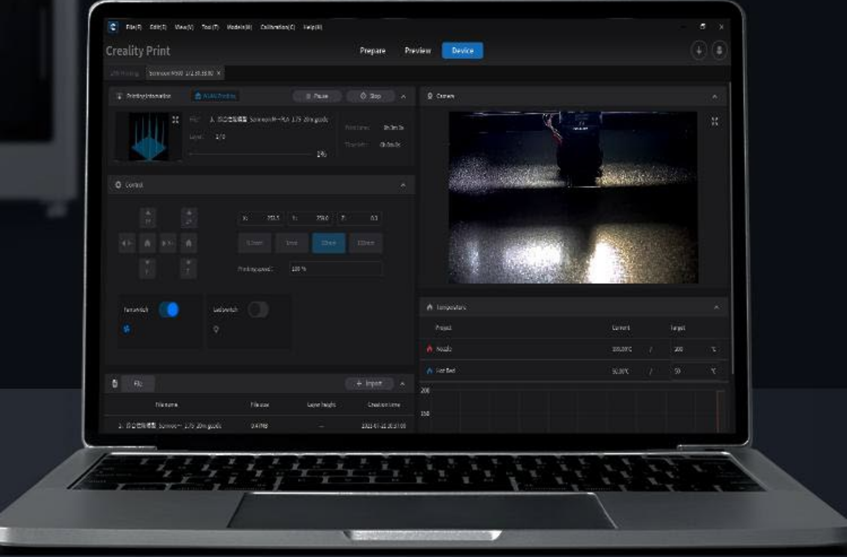

Efficient 0.6mm Nozzle

Sermoon M500 features a quality 0.6mm hardened steel nozzle with an orifice that is 2.25 times larger than that of a regular 0.4mm nozzle. It deposits materials in a thicker and more solid line, thus slashing printing time and increasing production capacity.

Closed-loop Motors Make It All Better

Closed-loop stepper motors are used in all of the X, Y, and Z axis. Featuring a sensitive feedback-control loop, they offer high torque, smooth steps, and precise positioning. Effective to boost printing speed and quality at the same time.

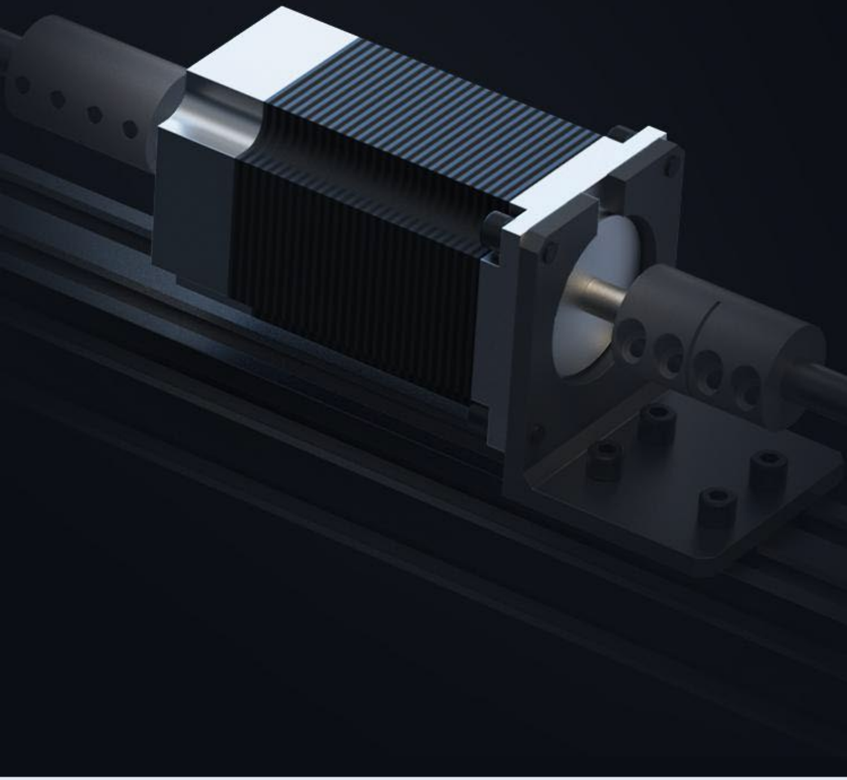

Safety-first Design

Ensuring safe production in all aspects.

- Emergency Stop Button
- Air Purifier
- Status Indicator
- Auto Shutdown after Printing

Suitable for Manufacturing

Long-lasting Auto Leveling

Quick-heating Heatbed

Multi-printers Control

Printing via WiFi

Applications

Socket

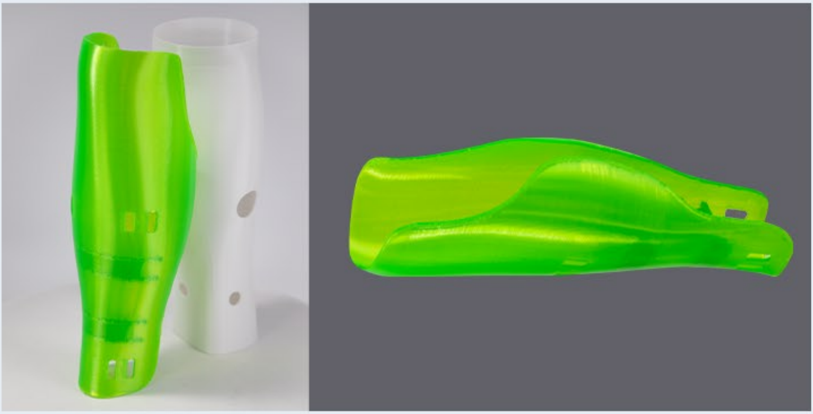

Prosthestic cover

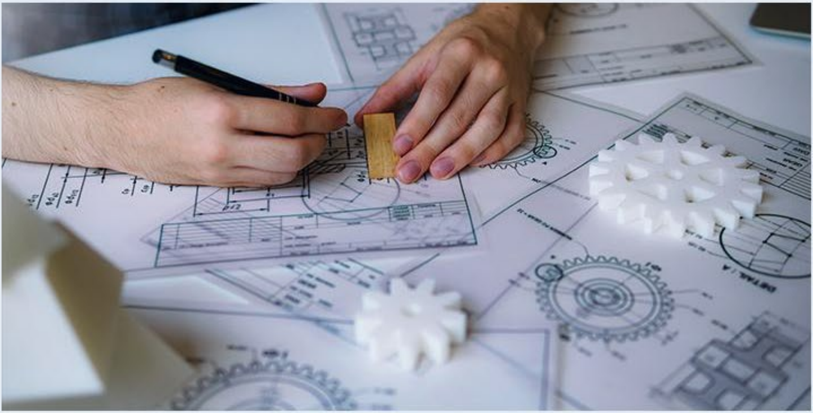

Prototyping

Manufacturing

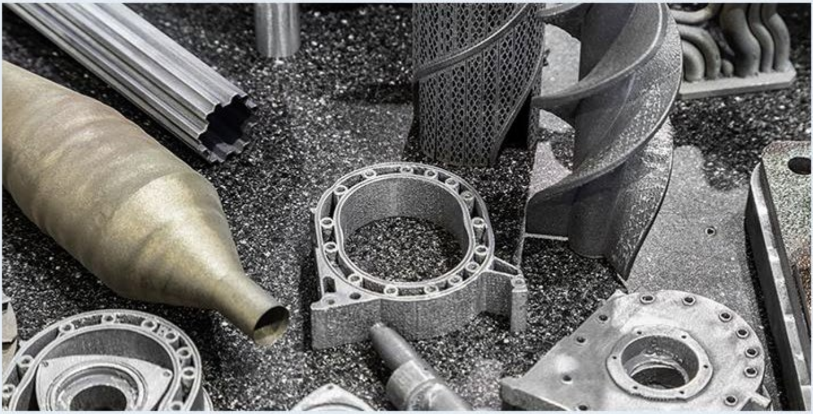

Industrial Design

Education & Scientific Research

Specifications

Product Name: Sermoon M500

Build Volume: 510*510*610mm

Product Dimensions: 950*920*1280mm

Net Weight: 270kg

Gross Weight: 310kg

Printing Speed: ≤150mm/s

Travel Speed: ≤300mm/s

Printing Accuracy: 100±0.1mm

Layer Height: 0.1-0.4mm

Filament Diameter: 1.75mm

File Transfer: USB drive, LAN printing, cloud printing

Nozzle Diameter: 0.6mm (default)

Nozzle Kit: Heatbreak: copper + titanium alloys

Nozzle: hardened steel

Nozzle Temperature: ≤300°C

Heatbed Temperature: ≤120°C

Extruder: "Sprite" direct drive extruder

Leveling Mode: Auto leveling

Mainboard: Integrated 32-bit mainboard

Connectivity: USB drive, WiFi, Ethernet, USB-C cable

Printable File Format: G-code

Power Loss Recovery: Yes

Filament Runout Sensor: Yes

Auto Shutdown after Printing: Yes

Chamber Heater: Yes

Air Purifier: Yes

Camera: Yes

Emergency Stop Button: Yes

Status Indicator: Yes

Rated Voltage: 100-240V 50~60Hz

Rated Power: 1600W

Slicing Software: Creality Print/Cura/Simplify3D

File Formats for Slicing: STL/OBJ/3MF/STEP

UI Languages: English, Chinese

Supported Filaments: PLA/PETG/PET/TPU/PA66/ABS/ASA/PLA-CF/PA66-CF/PET-CF